Product Code
05-E141-05-CK

Installation Instructions
3D File
Photometry
Revit (BIM)

Click

LedsC4 Team

Recessed wall lighting IP65 Click LED 1.4W 2700K ON-OFF Black 31lm

Technical features

Luminaire total power: 1.4W
Real lumens: 31
Real lm/W: 22
Correlated Colour Temperature (CCT): 2700K
Lens / reflector angle: FLOOD 84°
Structure material: Polycarbonate
Structure finish: Black
Diffuser material: Glass
Diffuser finish: Transparent
Voltage / frequency: 220-240V/50-60Hz
Dimming protocol: ON-OFF
Power Factor: 0.83
THD%: 41.4
Useful life: 50,000h L80B20
Warranty: 5 years
Corrosion resistance (Neutral Salt Spray test according to ISO 9227): 1500h

IP65 IK07



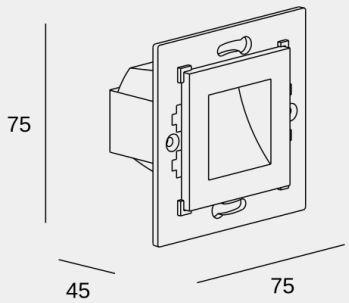

Luminotechnic features

TM30 RG: 96
TM30 RF: 85
CRI: 80
MacAdam steps: 3
Photobiological risk: RG0

Lampholder	Quantity	Light source power (W)	Correlated Colour Temperature (CCT)
LED	1	1.1W	2700K

Image may not match reference. LedsC4 reserves the right to amend any of the product's components. The data related to flux, power and colour temperature may be subject to changes made by the manufacturer.

ledsc4@ledsc4.com
LedsC4, Afores s/n 25750 Torà (Lleida) Spain +34 973 468 100

Click

LedsC4 Team

Recessed wall lighting IP65 Click LED 1.4W 2700K ON-OFF Black 31lm

Logistics

x 24

Net weight (kg): 0.1
Packaged weight (kg): 0.12
Packaging: 85mm x 55mm x 85mm

Light application



Image may not match reference. LedsC4 reserves the right to amend any of the product's components. The data related to flux, power and colour temperature may be subject to changes made by the manufacturer.

Click

LedsC4 Team

Recessed wall lighting IP65 Click LED 1.4W 2700K ON-OFF Black 31lm

Optional accessories

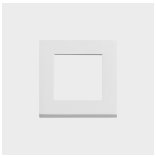

71-E489-14-14

White Frame

Structure material: Aluminium
Dimensions: 80 x NA x 80
Net weight (kg): 0.04

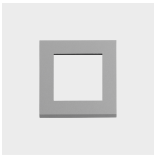

71-E489-34-34

Grey Frame

Structure material: Aluminium
Dimensions: 80 x NA x 80
Net weight (kg): 0.04

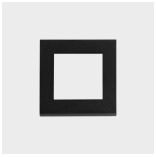

71-E489-60-60

Black Frame

Structure material: Aluminium
Dimensions: 80 x NA x 80
Net weight (kg): 0.04

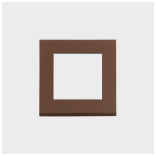

71-E489-J6-J6

Brown Frame

Structure material: Aluminium
Dimensions: 80 x NA x 80
Net weight (kg): 0.04

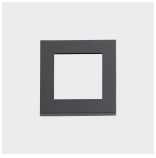

71-E489-Z5-Z5

Urban grey Frame

Structure material: Aluminium
Dimensions: 80 x NA x 80
Net weight (kg): 0.04

Image may not match reference. LedsC4 reserves the right to amend any of the product's components. The data related to flux, power and colour temperature may be subject to changes made by the manufacturer.