Product Code
10-8327-EX-EX

Installation Instructions
3D File
Photometry

Cocktail

Francesc Vilaró

Table lamp Cocktail LED 3.5W 2700K TOUCH DIMMING Olive grey 154lm

Technical features

Luminaire total power: 3.5W
Real lumens: 154
Real lm/W: 44
Correlated Colour Temperature (CCT): 2700K
Lens / reflector angle: HORIZONTAL 150°
Structure material: Aluminium
Structure finish: Olive grey
Diffuser material: Polycarbonate
Diffuser finish: Satin
Voltage / frequency: 100-240V ~ 50/60Hz
Dimming protocol: TOUCH DIMMING
Power Factor: 0.90
Useful life: 50,000h L80B20
Warranty: 5 years
Easily recyclable luminaire

IP20 | 350° | 60° | LED | DRIVER | G (A↑G)



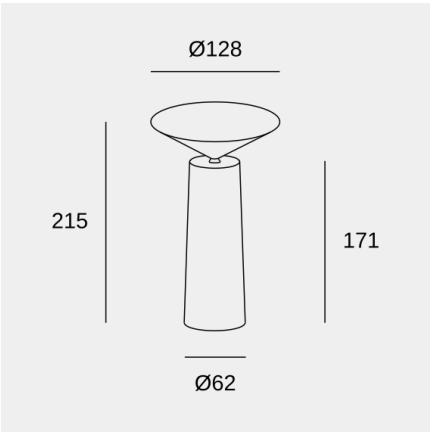

Luminotechnic features

CRI: 92
MacAdam steps: 3
Photobiological risk: RG0
UGR crosswise: 23.9
UGR lengthwise: 23.9

Lampholder	Quantity	Light source power (W)	Correlated Colour Temperature (CCT)
LED	1	3W	2700K

Image may not match reference. LedsC4 reserves the right to amend any of the product's components. The data related to flux, power and colour temperature may be subject to changes made by the manufacturer.

ledsc4@ledsc4.com
LedsC4, Afores s/n 25750 Torà (Lleida) Spain +34 973 468 100

Cocktail

Francesc Vilaró

Table lamp Cocktail LED 3.5W 2700K TOUCH DIMMING Olive grey 154lm

Emergency module features

Battery type: Lithium ion

Logistics

x 6

Net weight (kg): 0.82
Packaged weight (kg): 1.39
Packaging: 280mm x 160mm x 160mm

Light application



Image may not match reference. LedsC4 reserves the right to amend any of the product's components. The data related to flux, power and colour temperature may be subject to changes made by the manufacturer.

Cocktail

Francesc Vilaró

Table lamp Cocktail LED 3.5W 2700K TOUCH DIMMING Olive grey 154lm

Accessories included



Charger

Optional accessories



71-8332-05-00

Accessorie Cocktail Charger Black

Structure material: Polycarbonate + ABS
Dimensions: 66 x 110 x 22
Net weight (kg): 0.52

Image may not match reference. LedsC4 reserves the right to amend any of the product's components. The data related to flux, power and colour temperature may be subject to changes made by the manufacturer.