METRICA

WALL READER

LedsC4



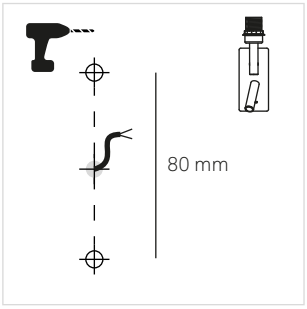

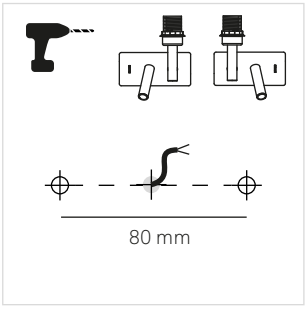

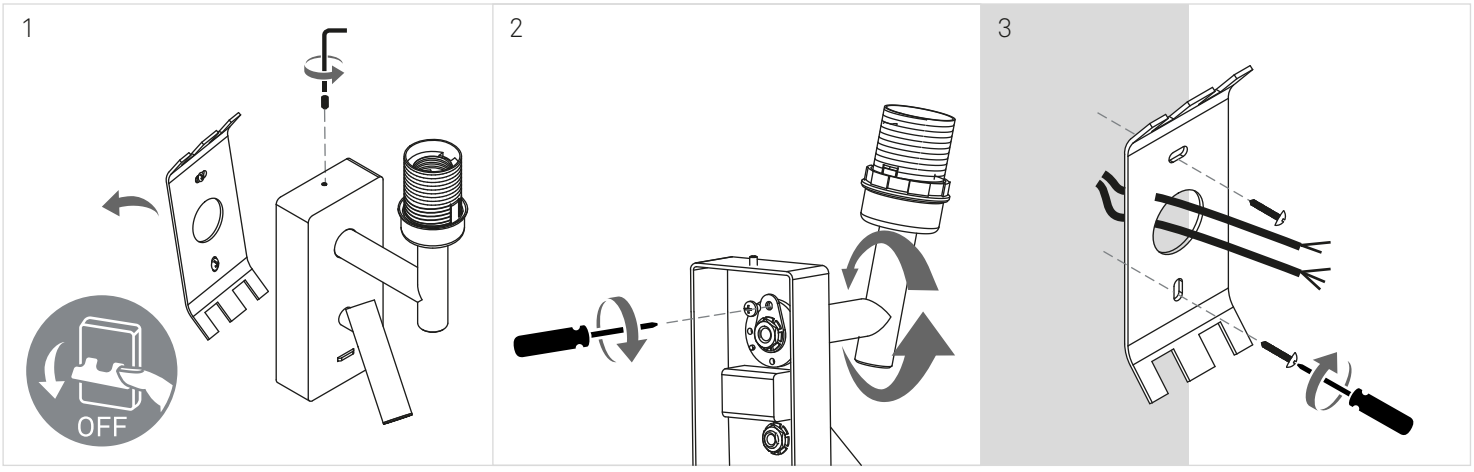

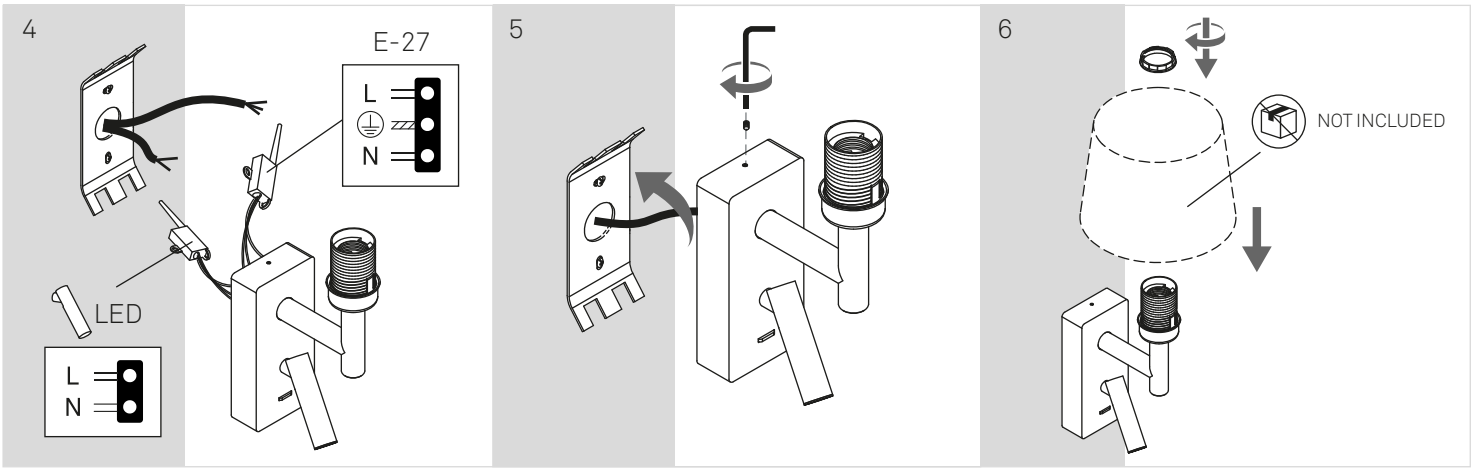

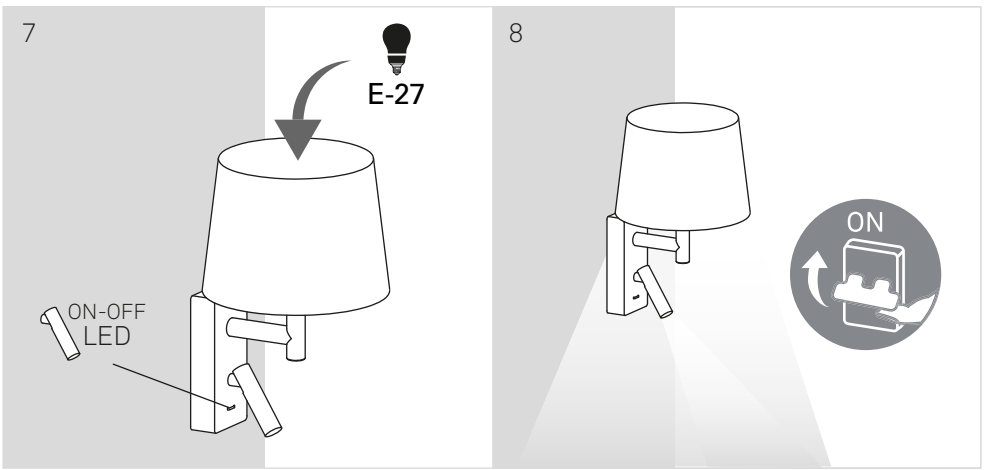

30-8-2021