Product Code
00-8392-05-05

Installation Instructions
3D File
Photometry

Noway Small

Francesc Vilaró

Pendant Noway Small LED 18.5W SW 2700-3000-4000K PHASE CUT Black 618lm

Technical features

Luminaire total power: 18.5W
Real lumens: 618 (3000K)
Real lm/W: 33
Correlated Colour Temperature (CCT): SW 2700-3000-4000K
Lens / reflector angle: HORIZONTAL 129°
Structure material: Steel
Structure finish: Black
Voltage / frequency: 220-240V/50-60Hz
Dimming protocol: PHASE CUT
Power Factor: 0.90
Useful life: 50,000h L80B20
Warranty: 5 years
Easily recyclable luminaire

IP20 | RF 850ºC | LED | DRIVER | F A↑G

Luminotechnic features

CRI: 92
MacAdam steps: 3
Photobiological risk: RG0

Lampholder	Quantity	Light source power (W)
LED	1	16.5W



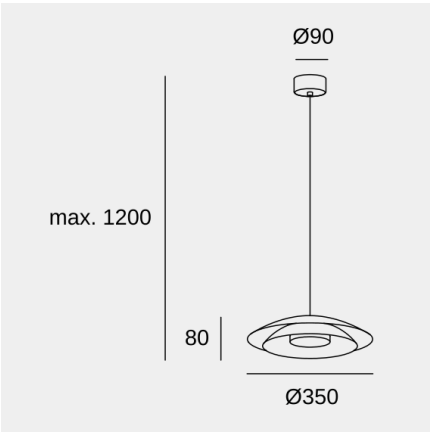



Image may not match reference. LedsC4 reserves the right to amend any of the product's components. The data related to flux, power and colour temperature may be subject to changes made by the manufacturer.

Noway Small

Francesc Vilaró

Pendant Noway Small LED 18.5W SW 2700-3000-4000K PHASE CUT Black 618lm

Logistics

x 1

Net weight (kg): 2.57
Packaged weight (kg): 3.47
Packaging: 406mm x 406mm x 270mm

Image may not match reference. LedsC4 reserves the right to amend any of the product's components. The data related to flux, power and colour temperature may be subject to changes made by the manufacturer.