Product Code
10-A078-60-60

Installation Instructions
3D File
Photometry
Revit (BIM)

Perlina

Nina Mair

Table lamp Perlina LED 8.8W SW 2700-3000-4000K TOUCH DIMMING Black 355lm

Technical features

Luminaire total power: 8.8W
Real lumens: 391 (3000K)
Real lm/W: 44
Correlated Colour Temperature (CCT): SW 2700-3000-4000K
Structure material: Steel
Structure finish: Black
Diffuser material: Glass
Diffuser finish: OPAL
Voltage / frequency: 220-240V/50-60Hz
Dimming protocol: TOUCH DIMMING
Power Factor: NULL
Useful life: 50,000h L80B20
Warranty: 5 years
Easily recyclable luminaire

IP20

Luminotechnic features

CRI: 92
MacAdam steps: 3
Photobiological risk: RG1
UGR crosswise: 25.7
UGR lengthwise: 25.7

Lampholder	Quantity	Light source power (W)
LED	1	7.2W



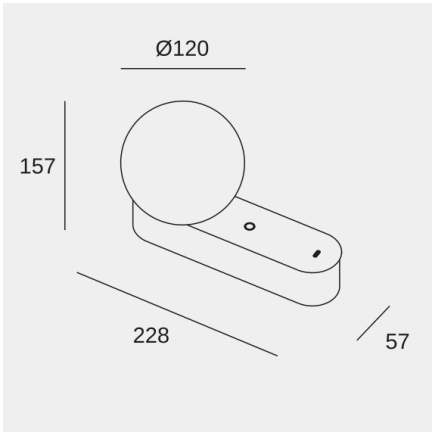

Image may not match reference. LedsC4 reserves the right to amend any of the product's components. The data related to flux, power and colour temperature may be subject to changes made by the manufacturer.

Perlina

Nina Mair

Table lamp Perlina LED 8.8W SW 2700-3000-4000K TOUCH DIMMING Black 355lm

Logistics

x 8

Net weight (kg): 1.05
Packaged weight (kg): 1.95
Packaging: 205mm x 205mm x 375mm

Image may not match reference. LedsC4 reserves the right to amend any of the product's components. The data related to flux, power and colour temperature may be subject to changes made by the manufacturer.