Product Code
10-A026-05-M1

Installation Instructions
3D File
Photometry
Revit (BIM)

Tubs

Nahtrang Studio

Table lamp Tubs LED 9.5W 2700K TOUCH DIMMING Black 435lm

Technical features

Luminaire total power: 9.5W
Real lumens: 479
Real lm/W: 50
Correlated Colour Temperature (CCT): 2700K
Lens / reflector angle: HORIZONTAL 125°
Structure material: Steel, Aluminium, Marble
Structure finish: Black
Diffuser material: Polycarbonate
Diffuser finish: Opal
Driver Brand: HEP
Voltage / frequency: 220-240V/50-60Hz
Dimming protocol: TOUCH DIMMING
Power Factor: 0.90
Useful life: 50,000h L80B20
Warranty: 5 years
Easily recyclable luminaire

IP20 | 360° | 0-90° | 360° | LED | DRIVER | G

Luminotechnic features

CRI: 92
MacAdam steps: 3
Photobiological risk: RG0

Lampholder	Quantity	Light source power (W)	Correlated Colour Temperature (CCT)
LED	1	8W	2700K

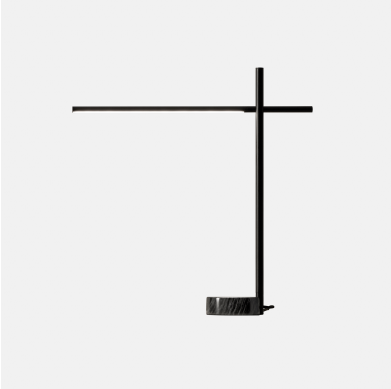

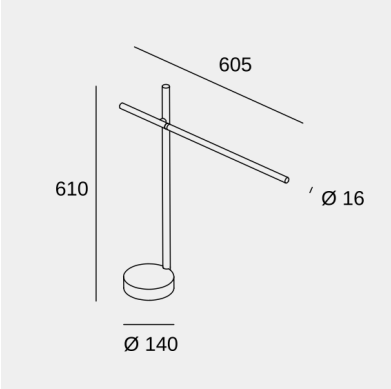

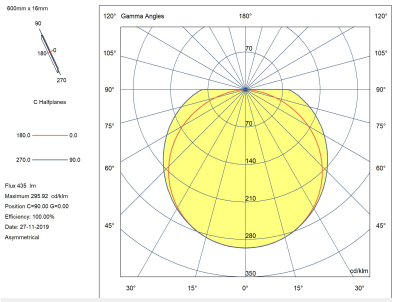

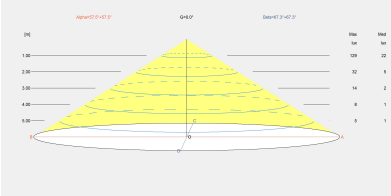

Image may not match reference. LedsC4 reserves the right to amend any of the product's components. The data related to flux, power and colour temperature may be subject to changes made by the manufacturer.

ledsc4@ledsc4.com
LedsC4, Afores s/n 25750 Torà (Lleida) Spain +34 973 468 100

Product Code
10-A026-05-M1

Installation Instructions
3D File
Photometry
Revit (BIM)

Tubs

Nahtrang Studio

Table lamp Tubs LED 9.5W 2700K TOUCH DIMMING Black 435lm

Logistics

x 4

Net weight (kg): 2.35
Packaged weight (kg): 4.16
Packaging: 210mm x 210mm x 730mm

Light application



Image may not match reference. LedsC4 reserves the right to amend any of the product's components. The data related to flux, power and colour temperature may be subject to changes made by the manufacturer.

ledsc4@ledsc4.com
LedsC4, Afores s/n 25750 Torà (Lleida) Spain +34 973 468 100