PIATONI MADE IN FRANCE **DATA SHEET** CE

RINÖZ S NT

Collection : RINÖZ



HANGING LAMP

Wood name : ASSIA (thickness 4.5mm / 0.17 in)
Interior use
IP20

ELECTRIC

220 - 240 V
Class 1
E27 / Max 57W
Supplied without bulb

Interior finish : Natural Oil
Exterior finish : Variable

DIMENSIONS

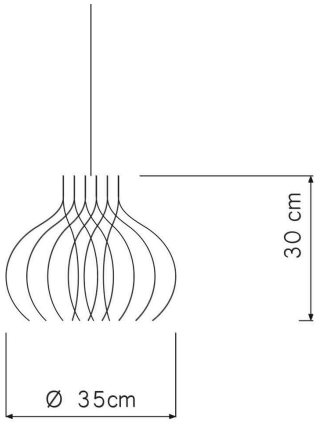

Lamp

Diameter : Ø35 cm
Height : H 30 cm

Rosette

Lacquered metal
Diameter : 12 cm

REF.	Name	Color EXT	Color rosette	Cable length	Cable color
J2 HN	RINÖZ S NT	Natural Oil	White	1m	Natural linen
J2 HB	RINÖZ S BK	Black lacquer	Black	1m	Black

PIATONI MADE IN FRANCE **DATA SHEET** CE

RINÖZ M NT

Collection : RINÖZ



HANGING LAMP

Wood name : ASSIA (thickness 4.5mm / 0.17 in)
Interior use
IP20

ELECTRIC

220 - 240 V
Class 1
E27 / Max 57W
Supplied without bulb

Interior finish : Natural Oil
Exterior finish : Variable

DIMENSIONS

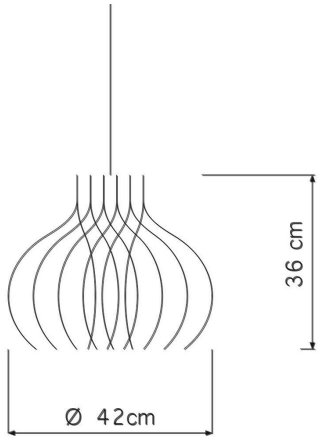

Lamp

Diameter : Ø42 cm
Height : H 36 cm

Rosette

Lacquered metal
Diameter : 12 cm

REF.	Name	Color EXT	Color rosette	Cable length	Cable color
J25 HN	RINÖZ M NT	Natural Oil	White	1m	Natural linen
J25 HB	RINÖZ M BK	Black lacquer	Black	1m	Black